

Soap-dispenser automatic tap All-in-One, wall

EN

Mounted on the wall

Soap-dispenser tap

Ref. DJ003AC/AB



DJ003AC

Chrome-plated brass

Bright finish



DJ003AB

Brass

Black finish

OVERVIEW

- Automatic tube-shaped soap dispenser tap.
- Contact-free automatic operation helps optimize soap use with each hand wash.
- Can operate with the automatic hand-dryer tap M095AC/M095AB and/or the automatic water tap GA003AC/GA003AB, or independently.

TECHNICAL DATA

Voltage	*220 – 240 V*
Frequency	*50/60 Hz*
Life battery	*60.000 cycles*
Range detection	*5 – 25 cm*
Soap viscosity	*100 – 3,500 cps*
Soap dosage	*0,5; 1,0; 1,5; 2,0 mL*

DIMENSIONS

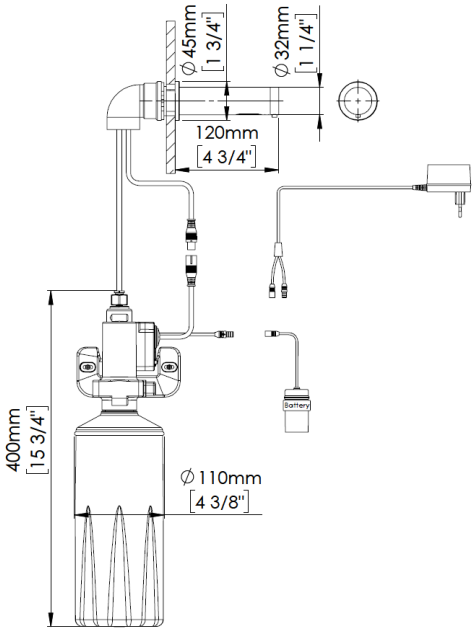

COMPONENTS AND MATERIALS

- Automatic soap dispenser tap with infrared sensor.
- Operates with a 220–240 V (AC) power adapter or 4 × 1.5 V AA batteries (DC). Adapter and battery holder included.
- Soap is contained in a 1.5 L plastic bottle and dispensed via an anti-drip valve.
- Soap dose is adjustable.

PVD COATING AVAILABLE (consult us)



OPERATION

- Automatic operation using an infrared sensor with adjustable detection range.

Mediclinics S.A. reserves the right to make changes or modifications to the products and their specifications without prior notice.

Soap-dispenser automatic tap All-in-One, wall

GUIDE SPECIFICATION

Individual unit composed of a wall-mounted soap dispenser tap, made of brass with a bright chrome, black, or various PVD finishes. The automatic soap dispenser features an infrared sensor on the lower part. It operates at 50/60 Hz and 220–240 V or with 4 × 1.5 V LR6 batteries. The soap tank capacity is 1.5 L. Soap viscosity must be between 100–3,500 cps. Dispensed soap dose is adjustable to 0.5, 1.0, 1.5, or 2.0 mL. Motion detection distance is adjustable with a magnet between 5–25 cm.

ASSEMBLY / RECOMMENDED INSTALLATION HEIGHTS

A washbasin that allows the installation of the All-in-One unit must be used, as shown in the following figure:

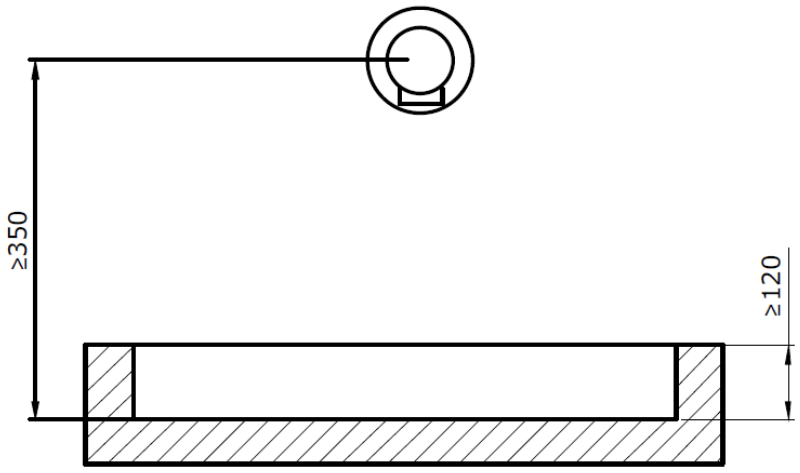

The washbasin must have a depth of at least 120 mm, with vertical walls and edges that are not excessively rounded in order to prevent splashing.

The tank must be positioned below the soap outlet.

Prior to the installation of this product, adequate access shall be provided to allow maintenance operations and/or potential repairs to be carried out.

CERTIFICATIONS

Mediclinics S.A. reserves the right to make changes or modifications to the products and their specifications without prior notice.